Dutton Plastics
ENGINEERING
A Division of the Zimco Group (Pty) Ltd.

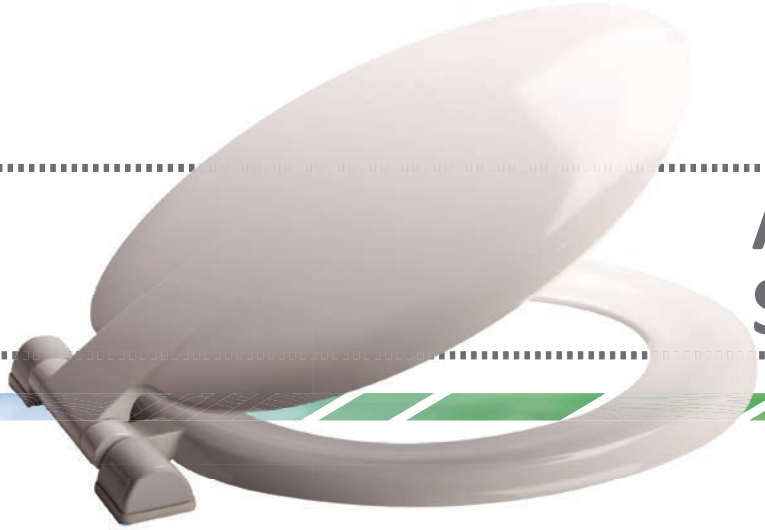

A1 HIGH TRAFFIC SEAT & COVER

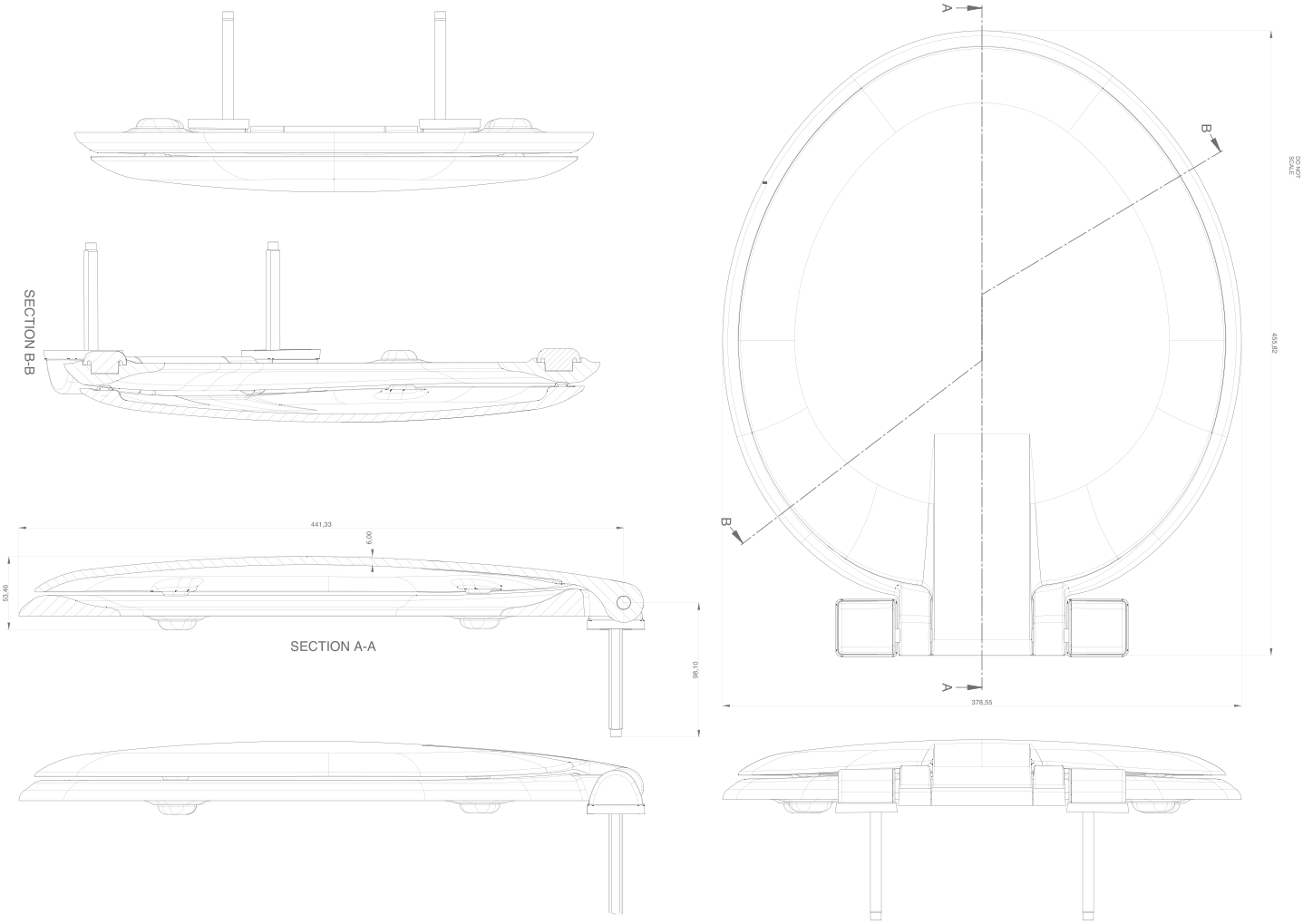

Head Office
14 Dienst Street, Alrode Ext. 2.
Alberton

Tel: +27 11 617 5000
Fax: +27 11 864 2677
E-mail:info@dutton.co.za